XEBEX FITNESS

Air Cycle ECO
AMSB-01-E

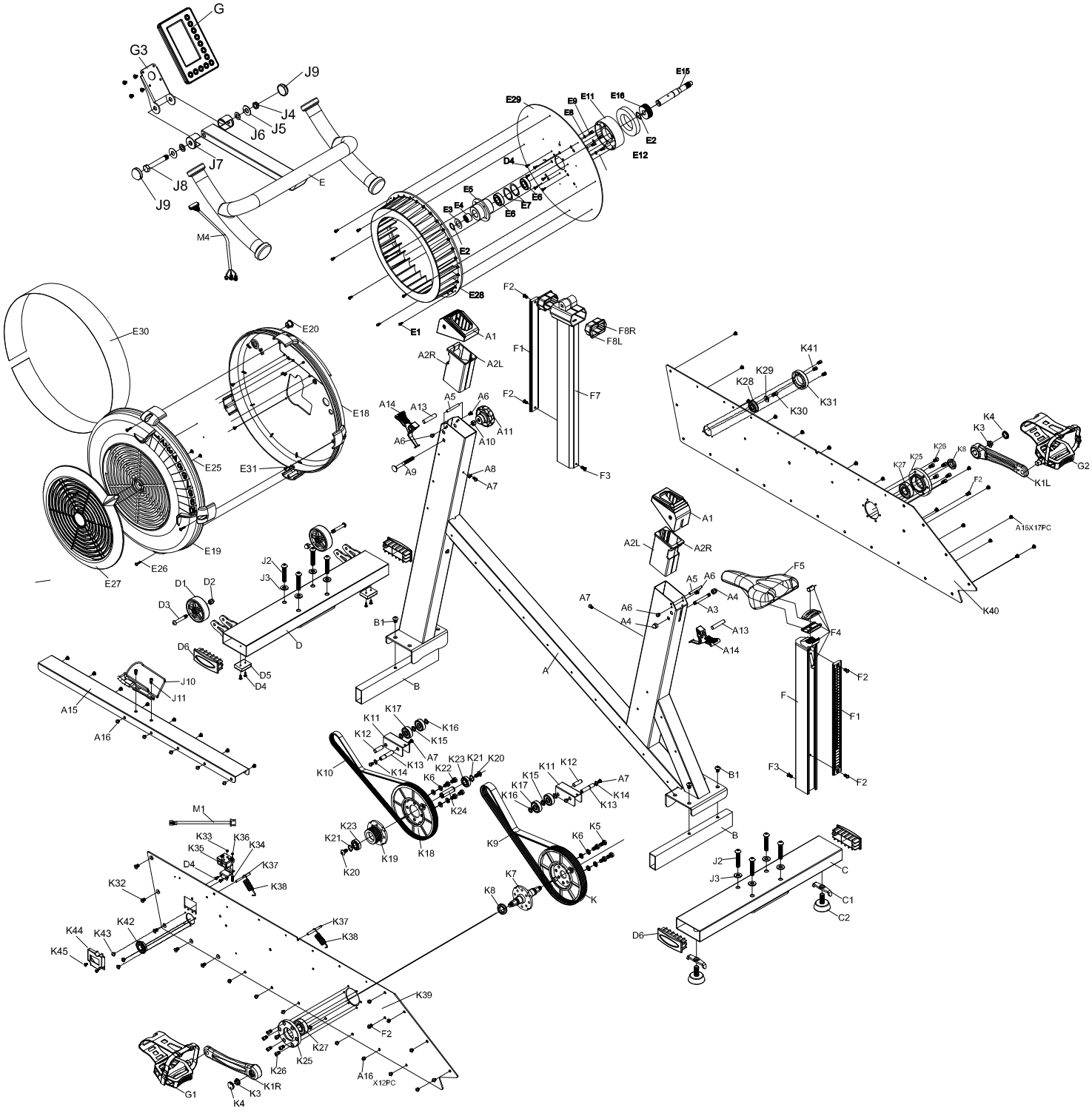

PARTS LIST

NO.	NAME	SPECIFICATION	Q'TY	NO.	NAME	SPECIFICATION	Q'TY
A	Main Frame		1	E2	Clip	S20	2
A1	Retractable Sleeve		2	E3	Steel Washer		2
A2L	Square Inner Sleeve-L		2	E4	One-Way Bearing	FC2016	1
A2R	Square Inner Sleeve-R		2	E5	Flywheel Bearing Holder		1
A3	Double-Head Screw	Φ8×65mm	1	E6	Bearing	6004	2
A4	Nut	M8	2	E7	Clip	R42	2
A5	Round Steel Rod	Φ6×50mm	2	E8	Spring Washer	M5	4
A6	Screw	M6×10mm	30	E9	Screw	M5×10mm	4
A7	Screw	M6×10mm	6	E11	Magnet Base		1
A8	Spring Washer	M6	1	E12	Ring Magnet		1
A9	Screw	M8×80mm	2	E15	Flywheel Shaft		1
A10	Nut	M8	2	E16	Drive Belt Pulley- PJ		1
A11	Knob	M8	2	E18	Inner Main Cover		1
A13	Lever Support Column	Φ10×49.5mm	2	E19	Outer Main Cover		1
A14	Lever		2	E20	Plug	Φ17	1
A15	Upper Steel Cover	Stainless steel 0.8T	1	E25	Tapping Screw	M4×10mm	2
A16	Screw	M6x6mm	15	E26	Tapping Screw	M4×20mm	4
				E27	Damper Disc Cover		1
				E28	Plastic Flywheel Fan		1
B	Packaging Tube		2	E29	Fan Plate		1
B1	Screw	M8x12mm	4	E30	Mesh		1
				E31	Tapping Screw	M4×10mm	4
C	Rear Stabilizer		1				
C1	Wing Nut	M12	2	F	Saddle Post		1
C2	Knob		2	F1	Adjuster Plate		2
				F2	Screw	M6×12mm	6
D	Front Stabilizer		1	F3	Screw	M6×10mm	2
D1	Transportation Wheel			F4	Saddle Set		1
D2	Nut	M8	2	F5	Saddle		1
D3	Screw	M8×50mm	2	F7	Handle Bar Post		1
D4	Tapping Screw	M4×12mm	12	F8L	Handle Bar Post Sleeve-L		2
D5	Square Pad		2	F8R	Handle Bar Post Sleeve-R		2
D6	Tube End Cap	40×100	4				
				G-E	Console		1
E	Handle Bar Assembly		1	G3	Console Base		1
E1	Screw	M4	8				

PARTS LIST

NO.	NAME	SPECIFICATION	Q'TY	NO.	NAME	SPECIFICATION	Q'TY
J2	Bolt	M10×55mm	8	K23	Bearing	6002	2
J3	Flat Washer	Φ10×2T×Φ18	8	K24	Flywheel Bearing Sleeve	Φ15×50mm	1
J4	Nut	1/2"-13UNC	1	K25L	Bearing Holder(L)		1
J5	Flat Washer	1/2"×1T×Φ32	2	K25R	Bearing Holder(R)		1
J6	Flat Washer	1/2"×2T×Φ23	2	K26	Bolt	M6×10mm	12
J7	Console Pivot Bushing		2	K27	Bearing		2
J8	Hex Head Screw	1/2"×3 1/4"	1	K28	Bearing with buckle	6201ZZ	1
J9	Nut Cap		2	K29	Flat Washer	M6×2T×19	1
J10	Bottle Holder (Optional)		1	K30	Screw with nylok	M6×12mm	1
J11	Screw	M5×10mm	2	K31	Bearing Cap		1
				K32	Bolt	M6×12mm	5
G1	Left Pedal		1	K37	Spring Rod	Φ6×56mm	2
G2	Right Pedal		1	K38	Spring		2
				K39	Iron Side Cover-L		1
K1L	Left Crank		1	K40	Iron Side Cover-R		1
K1R	Right Crank		1	K41	Screw	M5×8mm	3
K	Drive Belt Disc- PK	Φ180	1	K42	Bearing with buckle	BR-6003ZZ.Z3TPX-1	1
K3	Nut		2	K43	Screw	M5×6mm	3
K4	Shaft Cap		2	K44	Airproof Cover		1
K5	Screw	M8×16mm	4	K45	Tapping Screw	M4×10mm	2
K6	Spring Washer	M8	8				
K7	Shaft		1	M4	Console Wire		1
K8	Nut	M20	2				
K9	Drive Belt	1095PK6	1				
K10	Drive Belt	430J6	1				
K11	Idler Pulley Bracket		2				
K12	Idler Pulley Shaft	Φ10×30mm	2				
K13	Idler Pulley Sleeve	Φ10×50mm	2				
K14	Clip	S10	2				
K15	Flat Washer	Φ10×2T×Φ20	2				
K16	Flat Washer	Φ10×1T×Φ20	4				
K17	Bearing	6300	4				
K18	Drive Belt Disc-PJ	Φ180	1				
K19	Drive Belt Pulley-PJ		1				
K20	Bolt	M8×16mm	2				
K21	Clip	S15	2				
K22	Screw	M8×12mm	4				